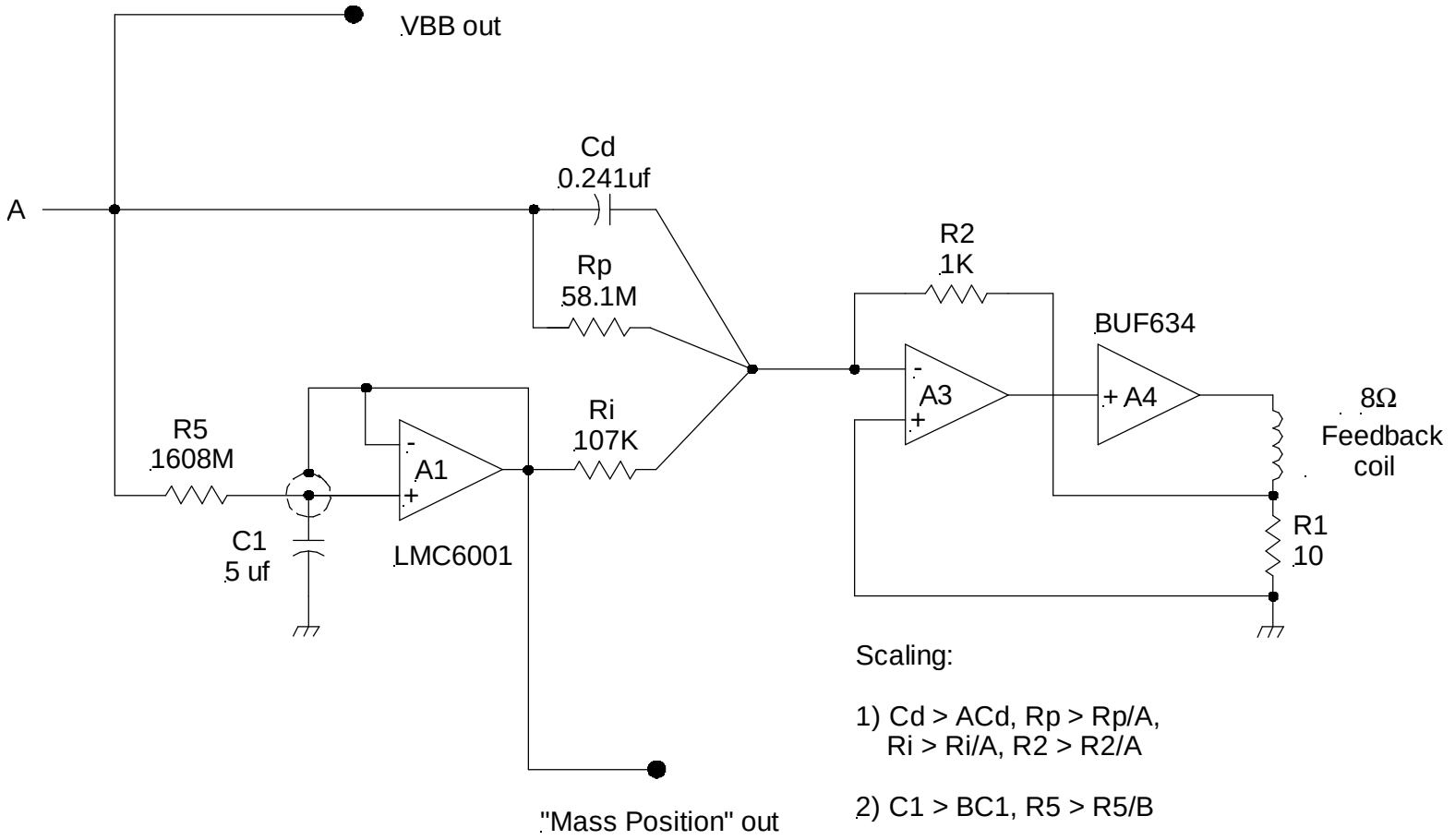

Scaling:

1) Cd > ACd, Rp > Rp/A,
   Ri > Ri/A, R2 > R2/A

2) C1 > BC1, R5 > R5/B