How to use the Excel Loop Design System

Brett Nordgren
Revised 25 May, 2009
brett3nt@bnordgren.org

Description:

The Workbook 'loop7.xls' has 21 'tabs'

2 are computational Worksheets

'Control' is where **all** data are entered and all data associated with the loop, except 'Bessel', are computed.

'Bessel' computes the response of a 3rd order Bessel filter, which may be inserted in the forward path of the loop, if desired.

4 are Worksheets devoted to text information:

'Notes' is a log of changes and short descriptions of their effects. Here you can find the date of the current revision.

'Macros' lists the available macros, their functions and their keyboard shortcuts.

'Parameters' lists all parameter symbols used and their definitions. At the bottom of the sheet is a block diagram to clarify where these parameters are located in a feedback instrument.

'Conversions' is a list of useful conversion factors

15 are graphical Charts:
The charts which are particularly useful for instrument design are indicated by '*'

*'Vel. Response' is the main chart. It shows the instrument Velocity Response, Forward Path Transfer Function, 1/Feedback Transfer Funcion, Loop Gain, and the transfer function of any added Inverse Filter, all as a function of frequency. This displays almost all significant information regarding loop performance.

*'Loop Phase' displays the phase shift of the loop gain as a function of frequency and indicates the gain-crossover frequency and associated phase margin. This indicates how near the loop is to feedback oscillation.

'Vel. Resp. Phase' shows the phase shift of the instrument Velocity Response vs frequency. This is interesting to compare with other instruments.

'Vel. Asymptotes' is similar to 'Vel. Response' with the addition of significant asymptote lines and their formulas.

*‘Compliance’ displays the closed-loop position sensitivity to an applied force. This suggests how the instrument will respond to applied error forces, as a function of their frequency of change.

‘Accel. Response’ displays the instrument response to a sinusoidal ground acceleration, as a function of frequency. It also indicates the response to steady-state acceleration changes, such as from instrument tilt.

*‘Force Resp.’ displays the instrument response to a sinusoidal applied force, as a function of frequency. Note that Force Response = mass, M_0 x Acceleration Response. This also suggests how the instrument will respond to applied, error forces.

*‘Force Rate Resp.’ displays the instrument response to the rate of an applied force as a function of frequency. At lower frequencies a typical broadband instrument will display a region of constant sensitivity to force rate application, as a result, for example, of changes in the spring force due to temperature changes.

‘Disp. Resp.’ displays the instrument response to a sinusoidal ground displacement, as a function of frequency.

‘SpMa-X’ displays the Spring-mass response to a sinusoidal ground displacement, as a function of frequency,

‘SpMa-V’ displays the Spring-mass response to a sinusoidal ground velocity, as a function of frequency.

‘SpMa-A’ displays the Spring-mass response to a sinusoidal ground acceleration, as a function of frequency.

‘Bes.Mag’ displays the transfer function of the Bessel filter vs frequency.

‘Bes.Phase’ displays the phase shift of the Bessel filter vs frequency.

‘Bes.Grp.Dly.’ displays the group delay of the Bessel filter vs frequency.

Operation:

When opening the spreadsheet, depending on your security settings, you may see a message stating that the workbook contains macros. In any case, unless you are just browsing, allow Excel to run the macros.

The workbook normally opens to the ‘Notes’ worksheet where you can see the date of the latest revision and descriptions of all changes.

You may ignore any “Negative or Zero values in Log Plots” error messages. This appears to be a bug in Excel.

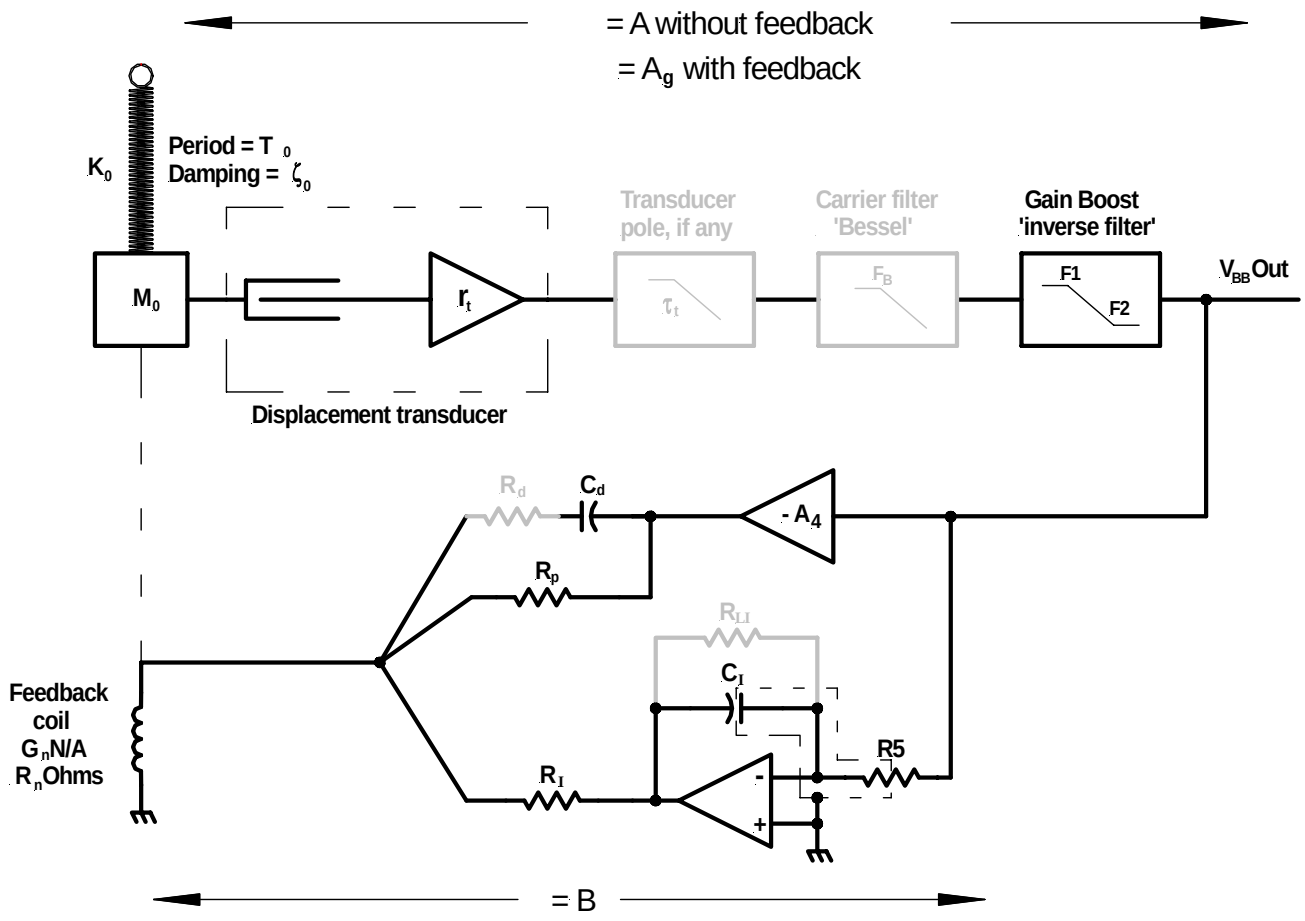

Block diagram locating some of the instrument parameters.

Example for Designing a Feedback Vertical Seismometer:

Our aim will be to design a feedback seismometer with a Generator Constant of 1500 Vs/m, a high frequency rolloff at 30 Hz and the low frequency corner at a period of 30 seconds. Normally we would start by entering the values of all the parameters which we know, such as the effective mass value, the spring-mass free period, the feedback coil parameters and anything else which we want to define. Here we will take a parameter set from an unfinished design, intended for adding feedback to a CM-3 vertical seismometer.

First open the 'Control' worksheet (Click on the 'Control' tab at the bottom of the page)
Load the 'Sample Design' data set to provide a starting point for the process.

Scroll down to line 125 so that the data set 'Sample Design' is visible.
Select (Click on) cell K125, the title cell of the 'Sample Design' data range enclosed by a dashed red line.
Type <ctrl><shift>'L' to **L**oad the data set into the working area which starts at Row 5.

Sample Design			
	TRUE	Use Proportional	
	TRUE	Use Integral	
	TRUE	Use Derivative	
	FALSE	Insert Inverse Filter	
	FALSE	Insert Bessel Filter	
	TRUE	Integrator is feedback type	
Parameters			**Initial Value**
C_d =	1.240E-05	Fd	1.240E-05
R_c =	0	Ohms	0
C_l =	4.4E-05	Fd	4.4E-05
τ_{Ll} =	1.00E+03	sec	1.00E+03
R_5 =	4.700E+06	Ohms	4.700E+06
R_p =	1.000E+06	Ohms	1.000E+06
R_l =	8,000	Ohms	8,000
G_n =	9.5	N/A	9.5
A_4 =	1.000	V/V	1.000
M_0 =	1.60	kg	1.60
M_1 =	Not used yet	kg	
ζ_0=	0.01		0.01
T_0 =	1.5	sec	1.5
r_t =	158,000	V/m	158,000
τ_d =	0.00E+00	sec	0.00E+00
Displacement Amp. Gain Boost - "inverse filter"			
F_1 =	0.0198	Hz	0.020
F_2 =	7.9577	Hz	7.958
Bessel Filter			
F_B =	1600	Hz	1600

This is what the working parameters should look like after the 'Sample Design' data set has been loaded.

Note: Some versions of the spreadsheet may have some values which are different from these. In order for the example below to match the spreadsheet data, please

correct any values in the spreadsheet yellow cells which do not match these. In particular, the yellow cells for R_d, R_I, M_0 and τ_t should be changed, if necessary, to match the values above.

Now take a look at the 'Vel. Response' chart (Click on the 'Vel Response' tab)

The green curve is the instrument response.
The blue curve is, A, the response with feedback absent.
The red curve is 1/B where B is the transfer function of the feedback path.
The pink curve is the loop gain ≡ AB = A/(1/B)
The orange line will represent the inverse filter function when it is used.

Since the green curve does not appear to be the velocity response we want, we will go back to the 'Control' worksheet to begin the design process.

1. We want the mid-band velocity response 'generator constant' A_g to change from 13,582 to 750 (displayed on 'Vel. Response' chart and in cell D43). The value, 750, is the result of having an output stage following the feedback loop having a gain of x2. If we design the feedback loop for A_g = 750, that will result in an over all instrument generator constant of 1500 Vs/m which is the desired value. If a higher generator constant is desired, it may be obtained by adding additional gain following the feedback loop.

To correct A_g, scroll down to row 56 so that the various 'Helpful Calculation Tools' are visible. In yellow cell D60 if not already=750, enter 750, the desired value for A_g . In the green cells we see that if we make C_d, the derivative branch capacitor = 224.6 μF, **or** we give amplifier A_4 a gain of 18.11 **or** we change the mass, Mo to 0.0884 Kg, **or** we make the force transducer G_n = 172.043 N/A , we should end up with A_4 = 18.06, as we desired.

We will first choose to reduce M_0 from 1.6 to 0.16.

Select yellow cell D24 and type in 0.16 for M_0, then <enter>. Since we have still not obtained a generator constant of 750 (shown in D43), we can now see in cell D64 that raising the forcing coil constant Gn to 17.204 should do the job. Go up and change cell D22 to 17.204. Under 'Mid Band Velocity Response' cell D59 now says 'Matches' which indicates that the desired value for A_g of 750 has been achieved with the current parameter values.

2. Reset the high frequency corner of the instrument response to 30Hz.

In yellow cell D67, if not already=30, enter 30.
Below we see the values for the displacement transducer gain, r_t, and also C_d, G_n and A_n, **any one** of which will achieve the desired 30 Hz rolloff. However changing C_d, A_4 or G_n will also change A_g from the desired 750 Vs/m.

So we will leave them alone and change r_t to 141374.

Select yellow cell, D28 and type in 141374 then <enter>. Under 'High Frequency Corner', cell D66 now says 'Matches' which indicates that the upper corner frequency now = 30Hz.

3. Reset the low frequency corner to correspond to a 30 second period.

In yellow cell D75 if not already=30, enter 30 for the desired T_{BB}.
Below we see values we can use for C_I **or** R5 **or** R_I which will give us the desired low frequency corner.

We will choose to change R5 to 5.223 Meg.

Select yellow cell, D19, and type 5.223E6 then <enter> Under 'Low Frequency Corner, Cell D74 will now say 'Matches' to indicate that our corner now is at 30Sec.

4. Now examine what we have so far.

Go to the 'Vel. Response' chart and look at the green curve. It matches the requirements except for the bump at the low frequency corner. That can be fixed by adjusting the Proportional feedback branch resistor R_p. If you type <ctrl><shift>'D' to execute the macro 'Adjust BB**D**amping', you will see the bump disappear. In the 'Control' worksheet cell D20, we can see that R_p has been reduced from 1Megohm to 272.5 k, which changes the damping factor of the low frequency corner (of B) to 0.707 of critical.

5. Correct the loop gain at 0.03Hz

At 0.03 Hz, the loop gain is less than 4. While the present configuration would appear to work fine, many benefits of having feedback are not being realized in the vicinity of 0.03Hz. A good rule is that wherever you can, the loop gain should remain above 100. In general, the higher the loop gain the better. However, in raising the loop gain one must also take into consideration its characteristics in the vicinity of the gain-crossover frequency, to assure that the loop doesn't begin to oscillate.

What would it take to get the loop gain up to 100? Since the loop gain equals the vertical distance between the red curve, 1/B, and the blue curve, A, if we were to raise A by a factor of slightly over 30, we should achieve the loop gain of 100 we are looking for. That could be done by adding gain to the position sensor amplifier, which would increase r_t . Try increasing r_t to 4,300,000. Now for the lower frequencies, the loop gain stays above 100 as we wanted. ***But***, the gain-crossover frequency and the associated high-end rolloff is now at 912Hz, not 30. That was because when we raised the blue curve by a factor of 30, its intersection with the red 1/B curve also moved to the right by a factor of about 30. What we need is a way to raise A at lower frequencies, but not at higher ones.

We need to use the '***Inverse Filter***'. It would be more accurate to call this an amplifier rather than a filter, in that it provides a substantial gain boost for A at low frequencies, but one which falls to 1 well before reaching the upper corner, gain-crossover, frequency.

Note here that the spreadsheet always assumes that the inverse filter gain = 1 at high frequencies. If the actual inverse filter circuit has a high-frequency gain greater that 1, that factor should be included in the value used for the transducer gain, r_t .

The design of the inverse filter involves a bit of trial and error.
First we should set r_t back to 141374, then select cell D10 and type <ctrl><shift>'T' to set it to TRUE, enabling the inverse filter.

To start, we can set its lower corner frequency, F_1, to be approximately the V_{bb} low corner frequency. Enter 0.032 for F_1 in cell D31. Initially F_2 can be 20x higher giving a DC gain of 20. Enter 0.64 for F_2 in cell D32. Now looking at the loop gain in 'Vel. Response' we see that it does not dip as low at 0.04 Hz, but it is still well below 100. To make it higher, we can start increasing F_2, a little at a time. F_2=1.5 is still too low, but

with F_2=1.6 the loop gain should be high enough. We note that this gives the 'filter' a DC gain of 50, displayed in D52.

The orange curve in the 'Vel. Response' chart now displays the response of the resulting Inverse Filter. It should be noted that this filter response is also included in the blue line plotting A.

Cleanup:
The Mass Centering Range Test, at Row 89, indicates that R_I may be allowed to go as high as 12.7K. It is currently 8K. Let's raise R_I to 12K. Type 12000 in yellow cell D21. Now looking at the Low Frequency Corner calculator at Row 79 we see that it is now suggesting 3.482Meg for R_5 . Set R_5 to 3.482Meg by typing 3.482E6 in cell D19.

Check the phase margin on the Chart 'Loop Phase'. It is near 87 degrees which is super conservative.

However, we forgot something. The forcing coil resistance adds a pole to A. We can approximate its effect by adding its resistance as R_d, in series with C_d. Assume that the forcing coil resistance is 67 ohms and enter 67 in cell D16 of the 'Control' worksheet.

Also, the position transducer we are planning to use has a pole with a time constant of about 0.5ms. Set τ_t to 0.5ms by entering 5e-4 in cell D29.

Going back to 'Loop Phase' we see that the phase margin has now decreased from 87 to 73 degrees. Although that is still quite conservative, there may be numerous small effects not included in the spreadsheet which will also tend to reduce the phase margin. Hopefully 73 degrees is good enough that losing a little more will not create a big problem.

We now have a feedback seismometer design which meets our original requirements, and which is very likely to work as planned when its parts are assembled.