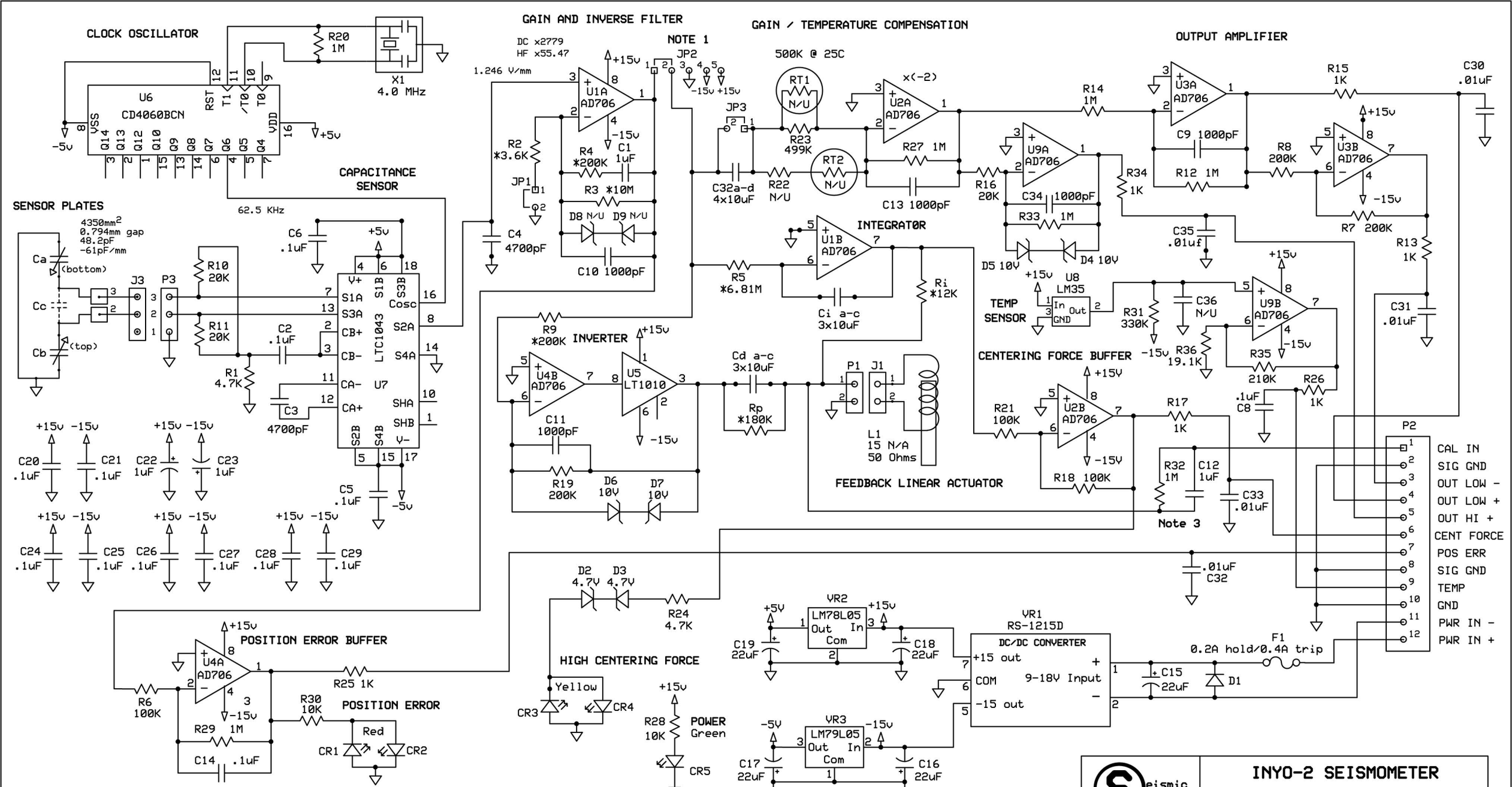


NOTE 1 Loop Test Signal Injection Point ---- Jump 1-2 for normal operation.
NOTE 2 Resistor values preceeded by '*' may be selected to obtain desired response.
NOTE 3 Install either R32 or C12 when injecting a calibration signal.
NOTE 4 Do not install components D8, D9, R22, RT1 and RT2

Seismic Systems

# INYO-2 SEISMOMETER FORCE BALANCE SYSTEM

REV. 2.0

4-1-2012

Brett Nordgren

FOR INYO-2 CIRCUIT BOARD REV. 2.0 4/4/2011